# REVISION HISTORY

## Schematics Index:

| Revision | Description | Date | Drawn | Checked |
|---|---|---|---|---|
| Ver 1.0 | Initial | 2016-09-05 | | |

supereyes.ru СУПЕРАИС

| | |
|---|---|
| Xunlong Software | |
| Design Name | ORANGE_PI-Zero plus |
| Size A3 | Page Name REVISION HISTORY |
| Rev | |
| Date: Tuesday, March 07, 2017 | Sheet 1 of 12 |

# BLOCK

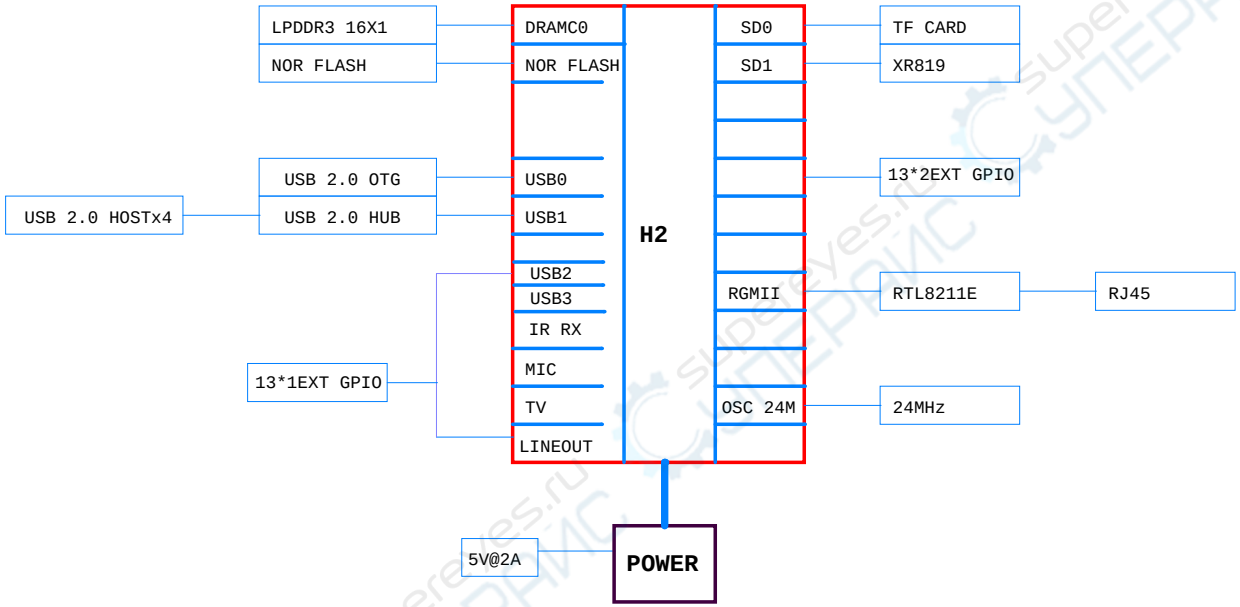


supereyes.ru СУПЕРГЛАЗ

| | | |
|---|---|---|
| Xunlong Software | | |
| Design Name: ORANGE_PI-Zero plus | | |
| Size: A3 | Page Name: BLOCK | Rev |
| Date: Tuesday, March 07, 2017 | Sheet 2 of 12 | |

# POWER TREE

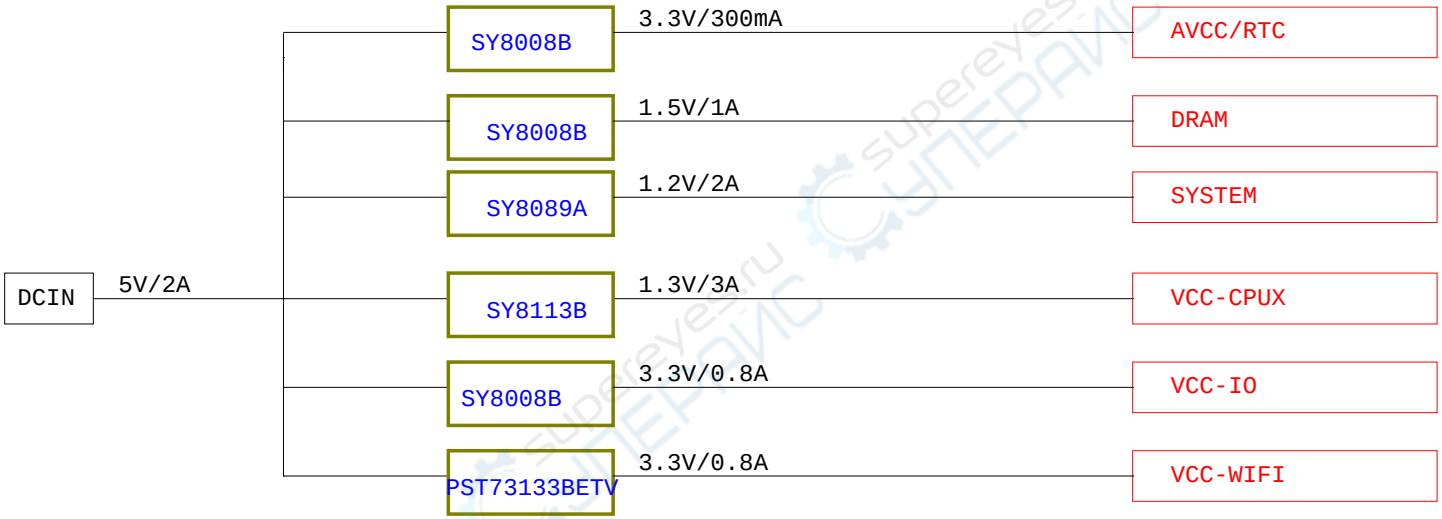


supereyes.ru СУПЕРАИС

| | |
|---|---|
| Xunlong Software | |
| Design Name | ORANGE_PI-Zero plus |
| Size A3 | Page Name POWER TREE |
| Rev | |
| Date: Tuesday, March 07, 2017 | Sheet 3 of 12 |

# GPIO ASSIGNMENT

| PIN | Define | CFG | Function |
|---|---|---|---|
| PA0 | TMS/DRVVBUS0 | 3/1 | JTAG /USB |
| PA1 | TCK/DRVVBUS1 | 3/1 | |
| PA2 | TDO/WPS | 3/1 | |
| PA3 | TDI | 3 | |
| PA4 | UART-TX | 3 | UART |
| PA5 | UART-RX | 3 | |
| PA6 | NC | 7 | |
| PA7 | NC | 7 | |
| PA8 | NC | 7 | |
| PA9 | NC | 7 | |
| PA10 | NC | 7 | |
| PA11 | NC | 7 | |
| PA12 | NC | 7 | |
| PA13 | NC | 7 | |
| PA14 | NC | 7 | |
| PA15 | STATUS-LED | 1 | LED |
| PA16 | MUTE | 1 | AV |
| PA17 | SPDIF-OUT | 2 | SPDIF |
| PA18 | NC | 7 | |
| PA19 | NC | 7 | |
| PA20 | NC | 7 | |
| PA21 | NC | 7 | |

| PIN | Define | CFG | Function |
|---|---|---|---|
| PC0 | NWE | 2/3 | NAND /eMMC /NOR |
| PC1 | NALE | 2/3 | |
| PC2 | NCLE | 2/3 | |
| PC3 | NCE1 | 2/3 | |
| PC4 | NCE0 | 2 | |
| PC5 | NRE | 2/3 | |
| PC6 | NRB0 | 2/3 | |
| PC7 | NRB1 | 2 | |
| PC8 | NDQ0 | 2/3 | |
| PC9 | NDQ1 | 2/3 | |
| PC10 | NDQ2 | 2/3 | |
| PC11 | NDQ3 | 2/3 | |
| PC12 | NDQ4 | 2/3 | |
| PC13 | NDQ5 | 2/3 | |
| PC14 | NDQ6 | 2/3 | |
| PC15 | NDQ7 | 2/3 | |
| PC16 | NDQS | 2/3 | |

| PIN | Define | CFG | Function |
|---|---|---|---|
| PD0 | NC | 7 | |
| PD1 | NC | 7 | |
| PD2 | NC | 7 | |
| PD3 | NC | 7 | |
| PD4 | NC | 7 | |
| PD5 | NC | 7 | |
| PD6 | NC | 7 | |
| PD7 | NC | 7 | |
| PD8 | NC | 7 | |
| PD9 | NC | 7 | |
| PD10 | NC | 7 | |
| PD11 | NC | 7 | |
| PD12 | NC | 7 | |
| PD13 | NC | 7 | |
| PD14 | NC | 7 | |
| PD15 | NC | 7 | |
| PD16 | NC | 7 | |
| PD17 | NC | 7 | |

| PIN | Define | CFG | Function |
|---|---|---|---|
| PE0 | NC | 7 | |
| PE1 | NC | 7 | |
| PE2 | NC | 7 | |
| PE3 | NC | 7 | |
| PE4 | NC | 7 | |
| PE5 | NC | 7 | |
| PE6 | NC | 7 | |
| PE7 | NC | 7 | |
| PE8 | NC | 7 | |
| PE9 | NC | 7 | |
| PE10 | NC | 7 | |
| PE11 | NC | 7 | |
| PE12 | NC | 7 | |
| PE13 | NC | 7 | |
| PE14 | NC | 7 | |
| PE15 | NC | 7 | |

| PIN | Define | CFG | Function |
|---|---|---|---|
| PF0 | D1 | 2 | CARD0 |
| PF1 | D0 | 2 | |
| PF2 | CLK | 2 | |
| PF3 | CMD | 2 | |
| PF4 | D3 | 2 | |
| PF5 | D2 | 2 | |
| PF6 | DET | 0 | |

| PIN | Define | CFG | Function |
|---|---|---|---|
| PG0 | NC | 7 | |
| PG1 | NC | 7 | |
| PG2 | NC | 7 | |
| PG3 | NC | 7 | |
| PG4 | NC | 7 | |
| PG5 | NC | 7 | |
| PG6 | NC | 7 | |
| PG7 | NC | 7 | |
| PG8 | NC | 7 | |
| PG9 | NC | 7 | |
| PG10 | NC | 7 | |
| PG11 | NC | 7 | |
| PG12 | NC | 7 | |
| PG13 | NC | 7 | |

| PIN | Define | CFG | Function |
|---|---|---|---|
| PL0 | TWI | 2 | TWI |
| PL1 | TWI | 2 | |
| PL2 | USB0-DRVVBUS | 1 | USB |
| PL3 | USB1-DRVVBUS | 1 | |
| PL4 | RECOVERY | 0 | KEY |
| PL5 | VCC-IO-EN | 1 | IO-EN |
| PL6 | NC | 7 | |
| PL7 | WIFI-EN | 7 | WIFI-EN |
| PL8 | PWR-STB | 1 | |
| PL9 | PWR-DRAM | 1 | |
| PL10 | PWR-LED | 1 | |
| PL11 | IR-RX | 2 | |

superevyes.ru УНЕРАМИ

# DDR3 16x2

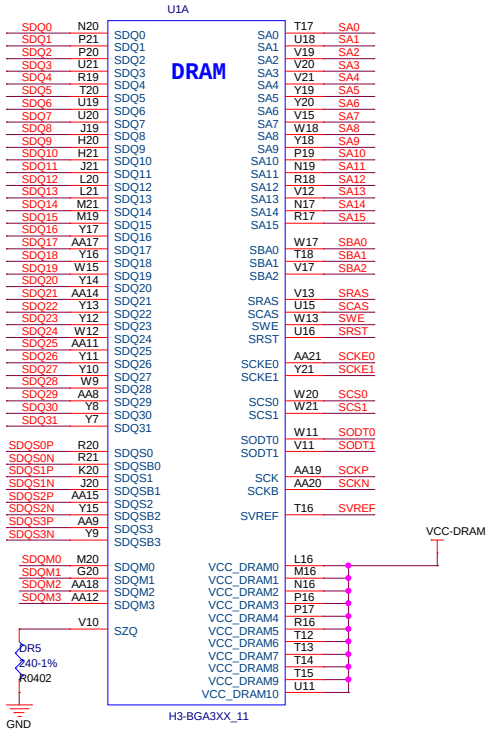


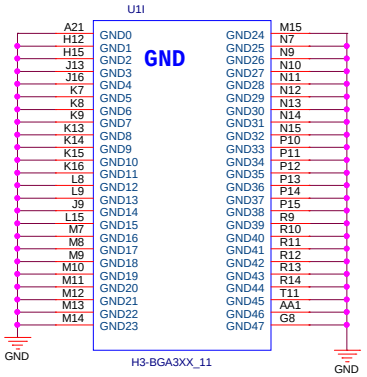


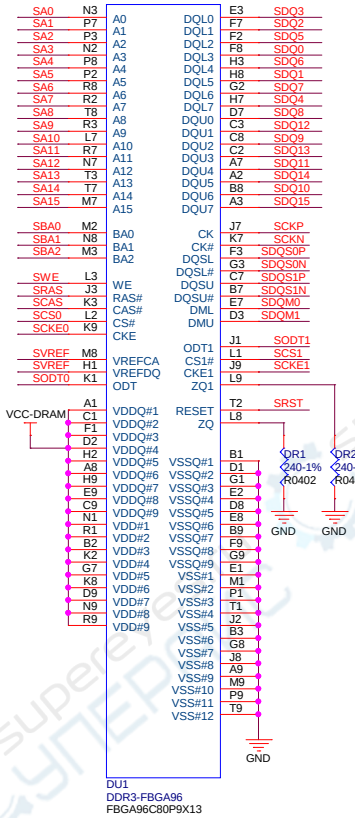


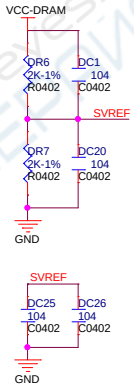


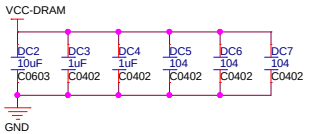


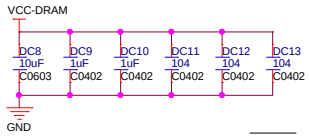


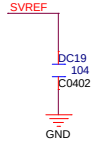


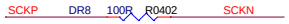


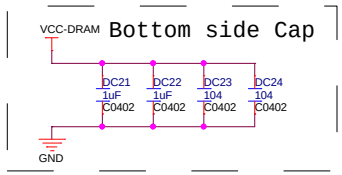


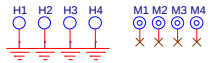


| | | |
|---|---|---|
| Xunlong Software | | |
| Design Name: ORANGE_PI-Zero plus | | |
| Size: A3 | Page Name: DDR3 16x1 | Rev |
| Date: Tuesday, March 07, 2017 | Sheet 5 of 12 | |

# CPU

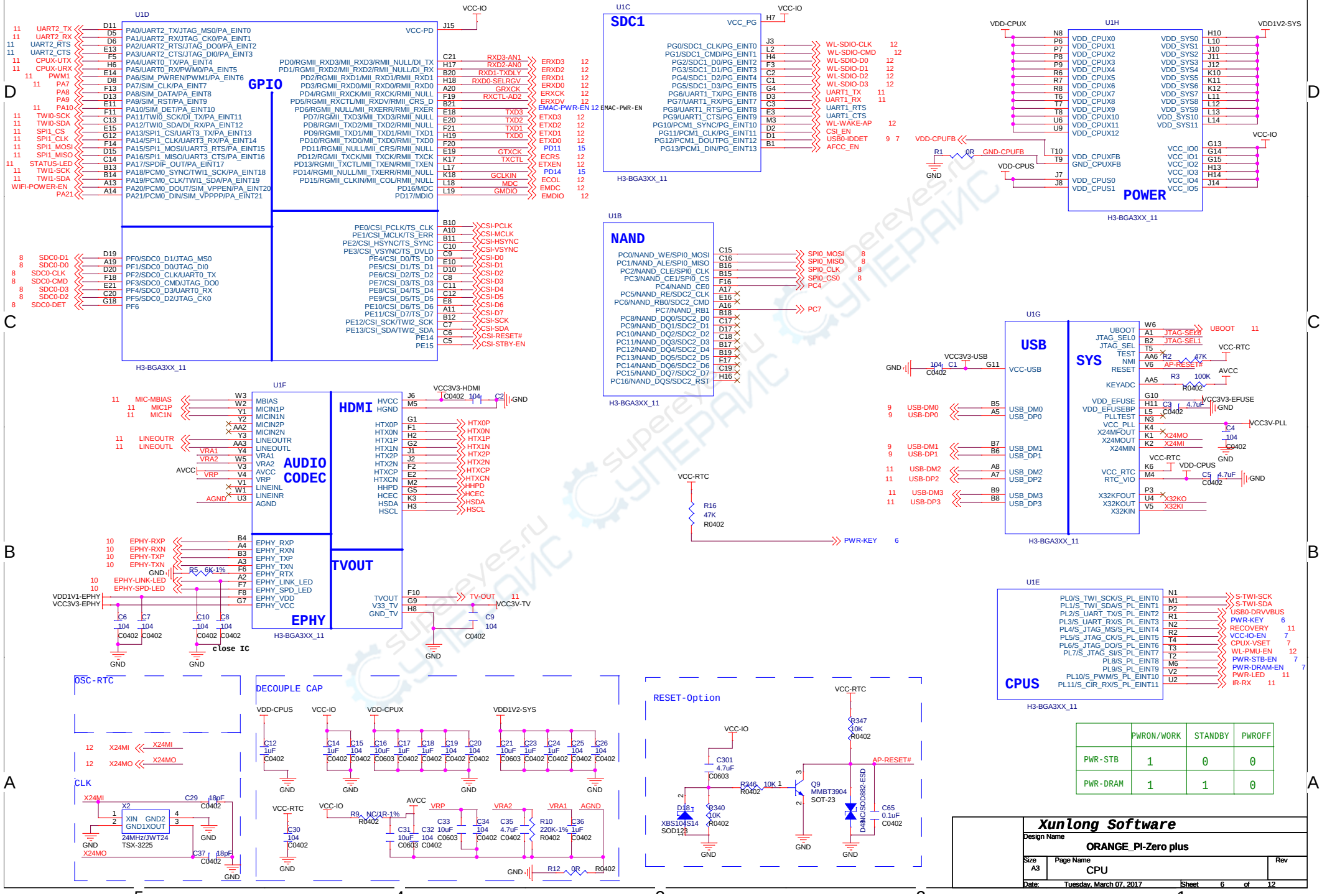


| | PWRON/WORK | STANDBY | PWROFF |
|---|---|---|---|
| PWR-STB | 1 | 0 | 0 |
| PWR-DRAM | 1 | 1 | 0 |

**Xunlong Software**

Design Name: ORANGE_PI-Zero plus

Size: A3 | Page Name: CPU | Rev

Date: Tuesday, March 07, 2017 | Sheet 6 of 12

# DCIN

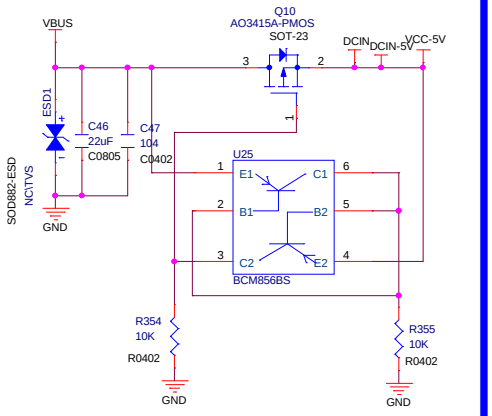


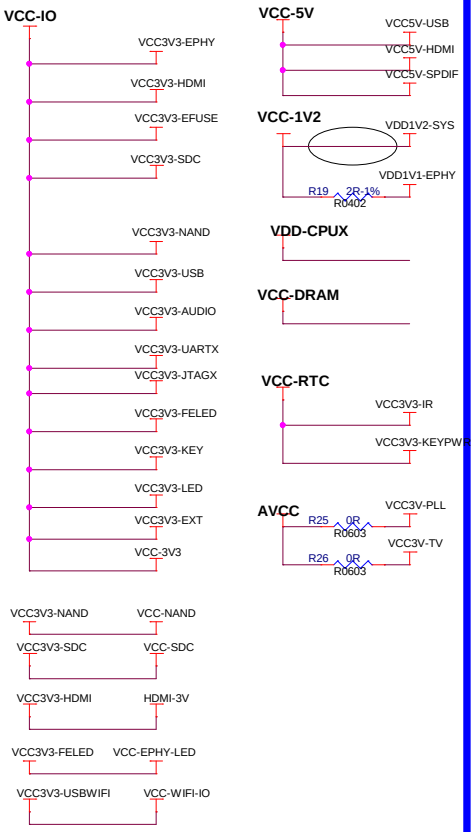


# POWER

## Vout = 0.6*(1+Rd1/Rd2)
## VDRAM=1.5V/1A,R2=100K-1%
## VDRAM=1.35V/1A,R2=120K-1%

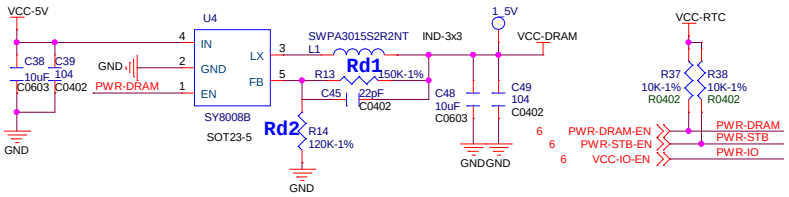


## VCCIO 3.3V/1A

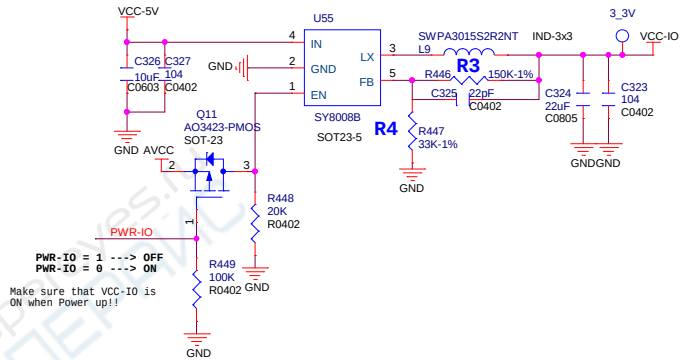


## SYSTEM 1.2V/2.5A
## Vout = 0.6*(1+R5/R6)

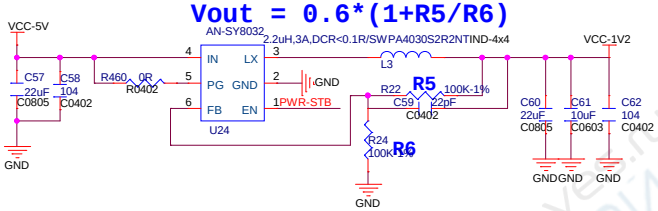


## AVCC 3.3V/1A

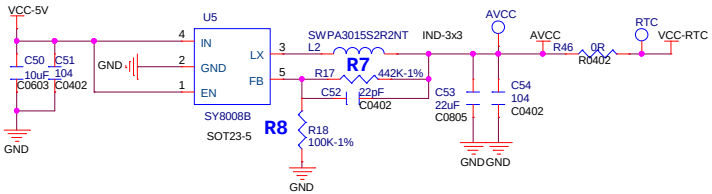


## CPUX 1.1V/1.3V/3A
## Vout = 0.6*(1+R1/R2)

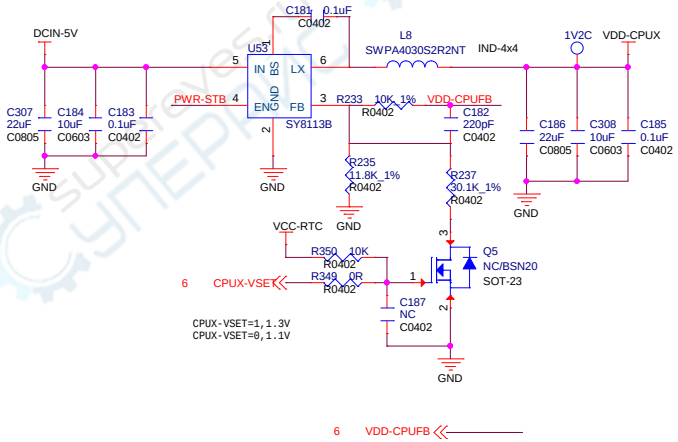


## WIFI Power 3.3V/300mA

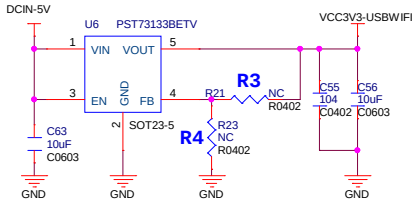


| | | |
|---|---|---|
| Xunlong Software | | |
| Design Name: ORANGE_PI-Zero plus | | |
| Size: A3 | Page Name: POWER | Rev |
| Date: Tuesday, March 07, 2017 | Sheet 7 of 12 | |

# eMMC

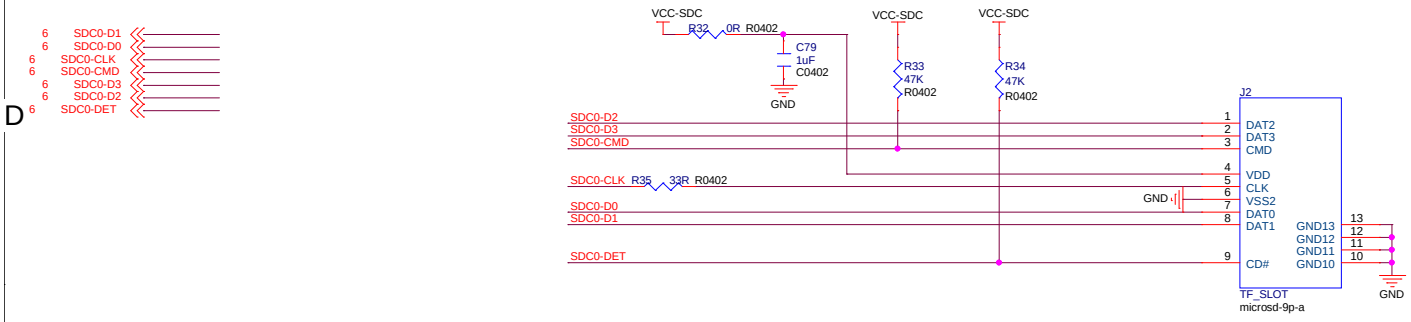


# NOR FLASH

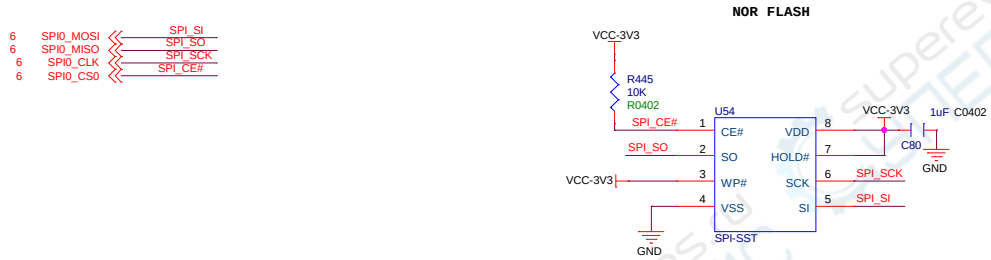


| | |
|---|---|
| Xunlong Software | |
| Design Name | ORANGE_PI-Zero plus |
| Size A3 | Page Name NOR FLASH-TF |
| Rev | |
| Date: Tuesday, March 07, 2017 | Sheet 8 of 12 |

# USB

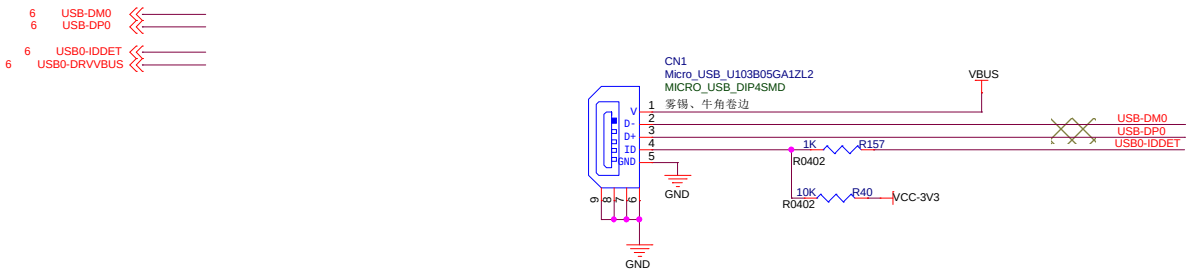


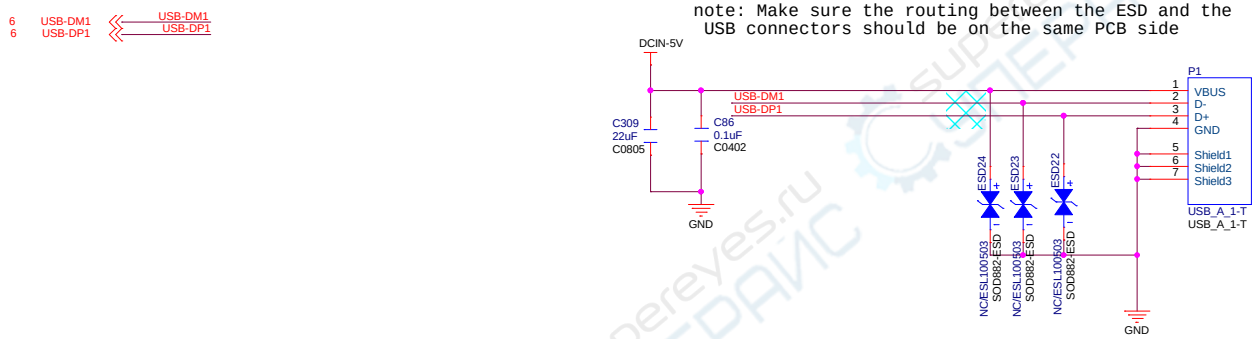


| | |
|---|---|
| Xunlong Software | |
| Design Name | ORANGE_PI-Zero plus |
| Size A3 | Page Name USB |
| Rev | |
| Date: Tuesday, March 07, 2017 | Sheet 9 of 12 |

# GMAC

## 10/100/1000 RGMII Ethernet PHY

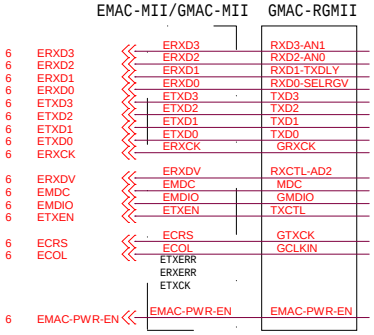


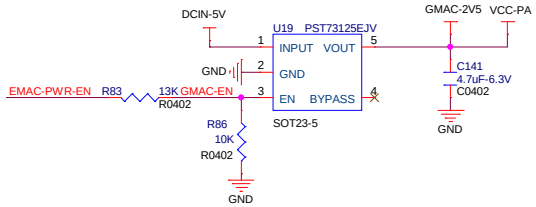


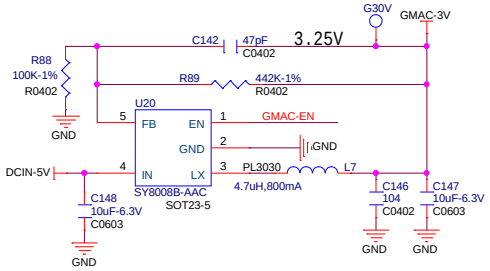


**Place filter network close to CLK125.**
**Reserved for EMI**

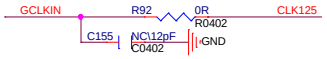


**Place filter network close to RX_CLK.**
**Reserved for EMI**

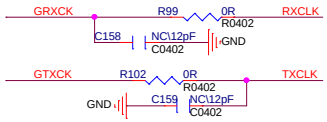


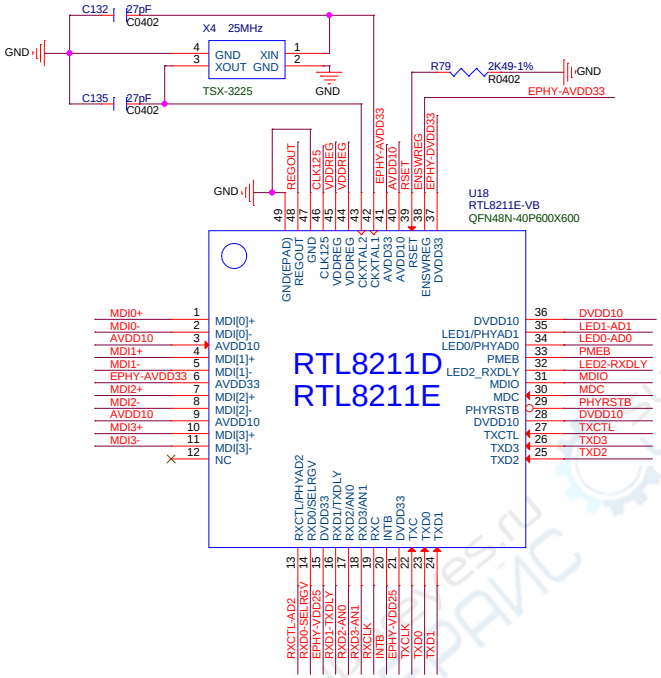


**Note 1: The Trace length between La and PHY's Pin48 must be within 0.5 cm. CJ(22uF) and CK(0.1uF) to La must be within 0.5cm.**

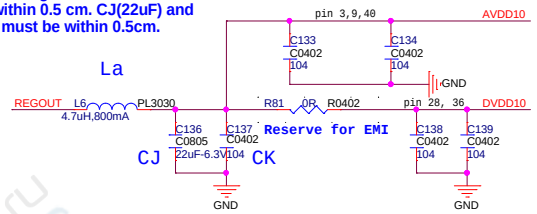


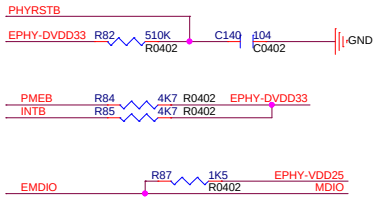


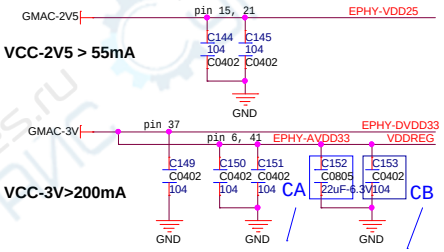


**Note 2: The Trace length from CA(22uF),CB(0.1uF) to Pin 44,45(VDDREG) must bewithin 0.5 cm. The trace width from AVDD33 to Pin 44,45 should>40mils.**

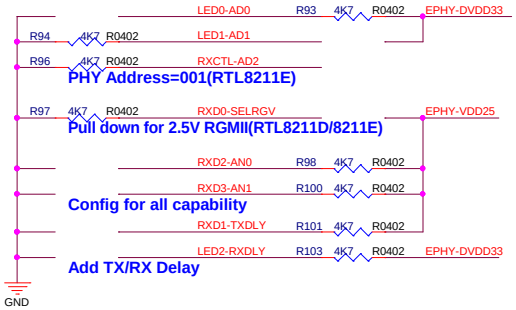


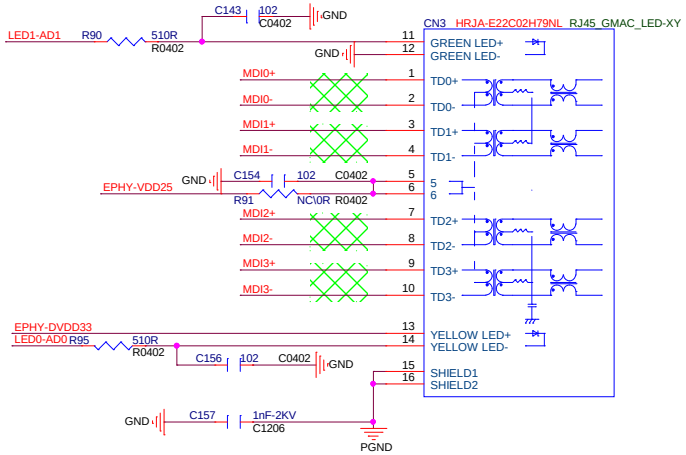


**LED0:Blinking=Transmitting or Receiving.**
**LED1:Link Up/Down**

| | | |
|---|---|---|
| Xunlong Software | | |
| Design Name: ORANGE_PI-Zero plus | | |
| Size: A3 | Page Name: GMAC | Rev |
| Date: Tuesday, March 07, 2017 | Sheet 10 of 12 | |

# Ext Port

## Ext

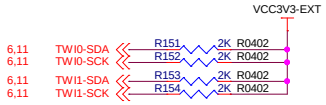


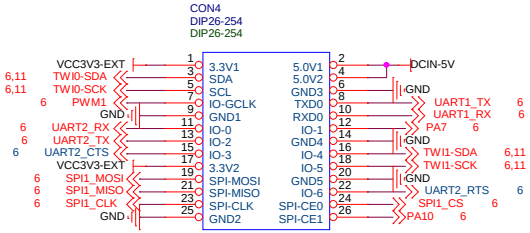


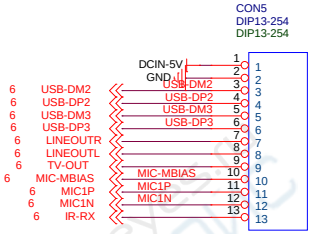


**USB*2@ AUDIO @ IR**

## LED

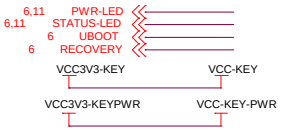


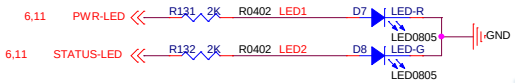

## KEY

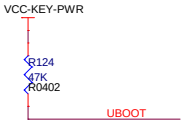


## DEBUG

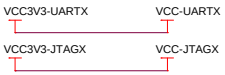


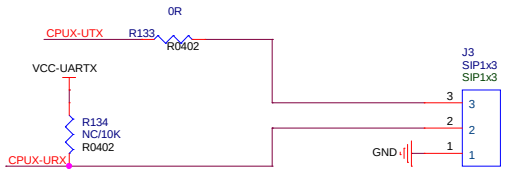


| | | |
|---|---|---|
| Xunlong Software | | |
| Design Name: ORANGE_PI-Zero plus | | |
| Size: A3 | Page Name: EXT | Rev |
| Date: Tuesday, March 07, 2017 | Sheet 11 of 12 | |

supereyes.ru УПЕРИС

# WIFI

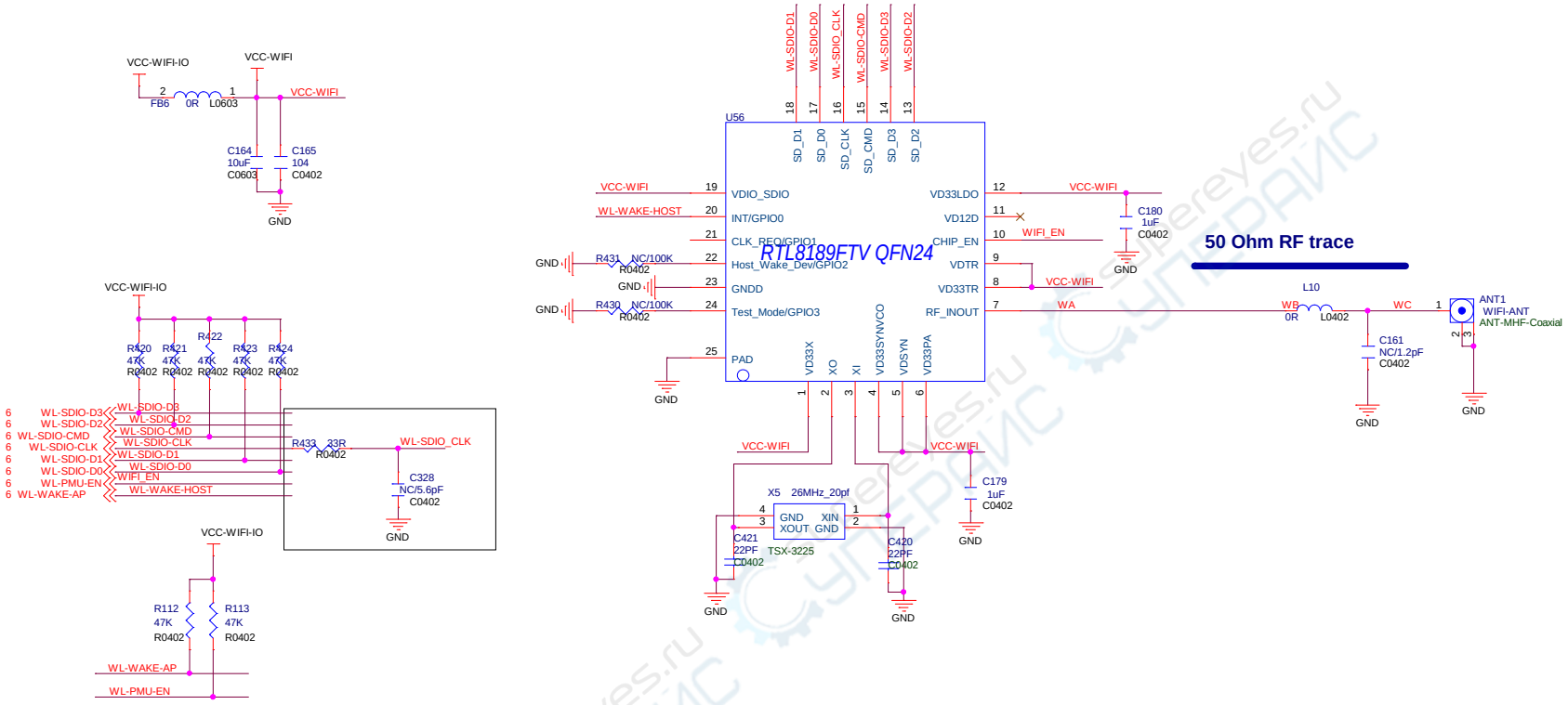


| | |
|---|---|
| Xunlong Software | |
| Design Name | ORANGE_PI-Zero plus |
| Size A3 | Page Name WIFI |
| Rev | |
| Date: Tuesday, March 07, 2017 | Sheet 12 of 12 |