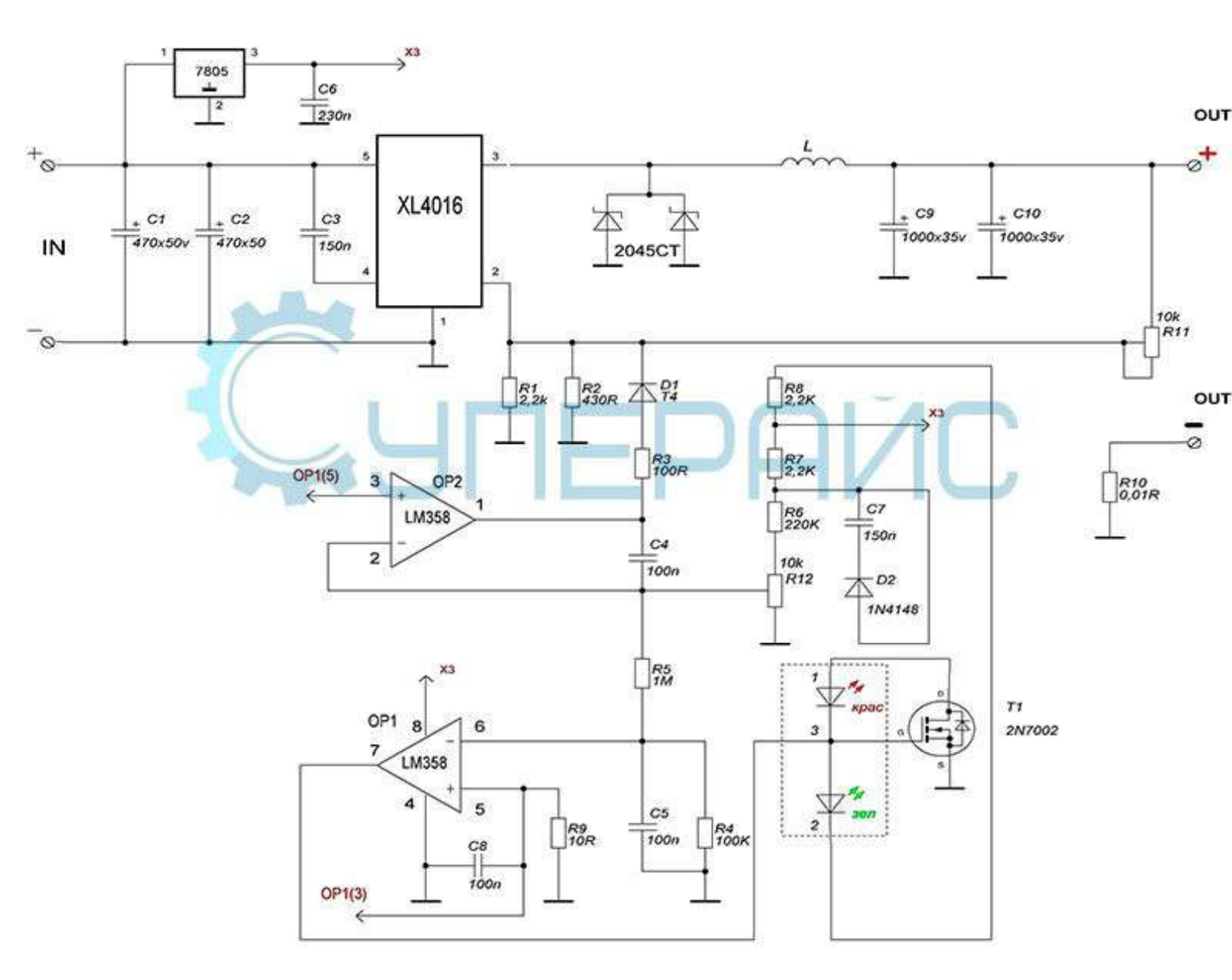
7805
X3
C6
230n
IN
C1
470x50v
C2
470x50
C3
150n
XL4016
L
2045CT
C9
1000x35v
C10
1000x35v
OUT
10k
R11
R1
2,2k
R2
430R
D1
T4
R8
2,2K
R7
2,2K
R3
100R
OP1(5)
OP2
LM358
R6
220K
C7
150n
C4
100n
10k
R12
D2
1N4148
R10
0,01R
R5
1M
OP1
LM358
C8
100n
R9
10R
C5
100n
R4
100K
OP1(3)
крас
зел
T1
2N7002